MACHINE SPECIFICATION

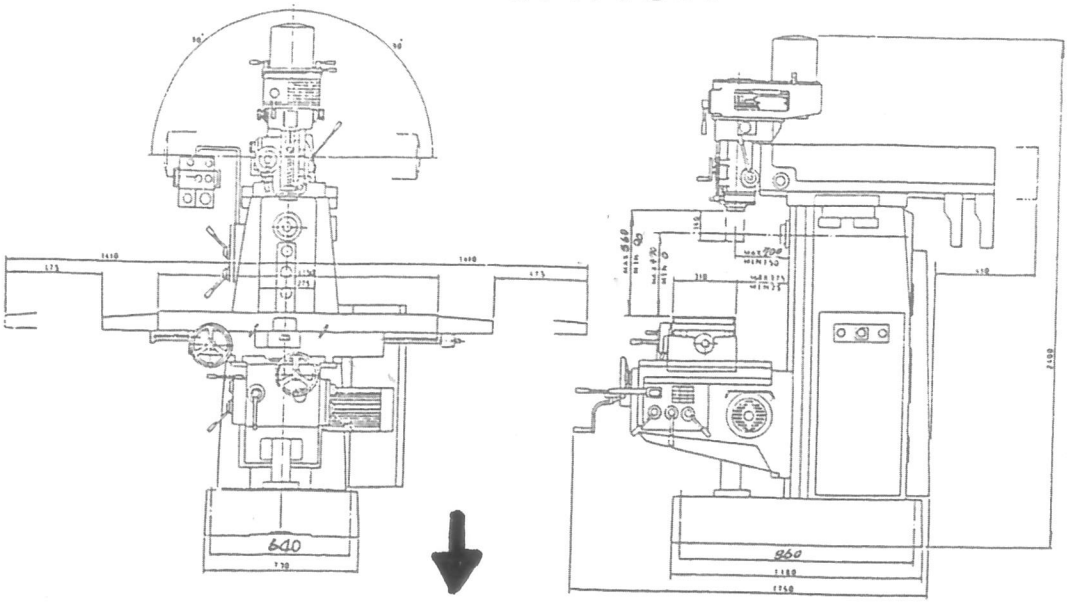

MODEL	DL-GH950 VERTICAL-HORIZONTAL TURRET MILLING MACHINE		DL-G950 VERTICAL TURRET MILLING MACHINE	
TABLE	**METRIC**	**INCH**	**METRIC**	**INCH**
Working surface	1350x310mm	53.1"x12.2"	1350x310mm	53.1"x12.2"
Longitudinal travel	950mm	37.4"	950mm	37.4"
Cross travel	350mm	13.8"	350mm	13.8"
Vertical travel	470mm	18.5"	470mm	18.5"
T-slots (size x number x distance)	16mmx3x60mm	0.63"x3x2.36"	16mmx3x60mm	0.63"x3x2.36"
Longitudinal & cross feeds (12 steps)	13–1050mm/min	0.5"–41.3"/min	13–1050mm/min	0.5"–41.3"/min
Vertical feeds (12 steps)	5–410mm/min	0.2"–16.1"/min	5–410mm/min	0.2"–16.1"/min
Rapid longitudinal & cross traverse	3200mm/min	126"/min	3200mm/min	126"/min
Rapid vertical traverse	1280mm/min	50.4"/min	1280mm/min	50.4"/min
Table swivelling angle (R & L) each side	–		–	
VERTICAL SPINDLE				
Spindle speeds (16 steps)	75–3600 r.p.m.		75–3600 r.p.m.	
Spindle speeds (Option)	(Infinite variable) 80–3800 r.p.m.		(Infinite variable) 80–3800 r.p.m.	
Quill travel	140mm	5-1/2"	140mm	5-1/2"
Quill feed (3 steps)	0.035, 0.07, 0.14mm/rev	0.001", 0.003", 0.006"/rev	0.035, 0.07, 0.14mm/rev	0.001", 0.003", 0.006"/rev
Taper of spindle nose	N.S.T. # 40		N.S.T. # 40	
Swivelling angle of vertical milling head (R & L) each side	90°		90°	
Swivelling angle of overarm	360°		360°	
Overarm travel	550mm	21.6"	550mm	21.6"
Distance of spindle end to table top	90–560mm	3.5"–22"	90–560mm	3.5"–22"
Distance of spindle center to column surface	150–700mm	5.9"–27.5"	150–700mm	5.9"–27.5"
HORIZONTAL SPINDLE				
Spindle speeds (12 steps)	50 – 2040 r.p.m.		–	
Taper of spindle nose	N.S.T. # 40		–	
Distance of spindle center to table top	0–470mm	0–18.5"	–	–
Distance of spindle center to overarm bottom	165mm	6.5"	–	–
MOTORS				
Vertical spindle	3HP (Variable: 5 HP)		3HP (Variable: 5 HP)	
Horizontal spindle	5HP – 4P		–	
Table longitudinal & cross & vertical feed	3HP – 4P		3HP – 4P	
Coolant pump	1/8HP – 2P		1/8HP – 2P	
MACHINE WEIGHT AND PACKING				
Net weight	2800 Kgs.	6160 lbs.	2600 Kgs.	5720 lbs.
Gross weight	3200 Kgs.	7040 lbs.	2900 Kgs.	6380 lbs.